jaquar.com

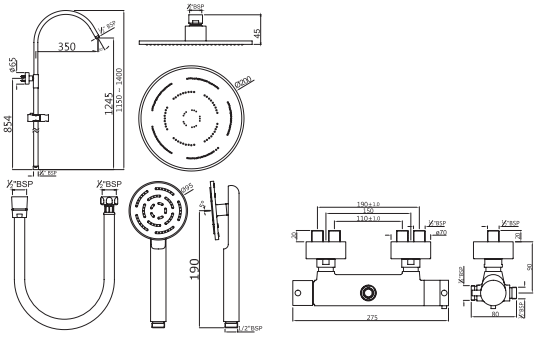

Product Code	FLR-CHR-5653SHK
Description	Multifunction Thermostatic Shower Valve with Integrated Diverter and Adjust Height Upto 250mm Rigid Riser with Shower Head & Shower Handset (1213, 1613, 1653 & 571)
Flow Rate	35.16 LPM @ 3 bar
Recommended Water Pressure	0.5 Bar - 5 Bar
Material Composition Specification in Percentage	**Brass Ingots as per IS:1264-1997** Cu (58.0-63.0), Sn (0.0-1.0), Pb (0.5-2.5), Ni (0.0-1.0), Al (0.2-0.8), Mn (0.0-0.5), Total Impurity (0.0-2.0), Zn (Remainder) **Brass Rod as per IS:319-1989** Cu (56.0-59.0), Pb (2.0-3.5), Fe (0.0-0.35), Total Impurity (0.0-0.7), Zn (Remainder) **Brass Sheets as per IS:410-1977** Cu (61.5-64.5), Pb (0.0-0.3), Fe (0.0-0.075), Total Impurity (0.0-0.6), Zn (Remainder) **Brass Pipe as per IS:407-1996** Cu (62.0-65.0), Pb (0.0-0.3), Fe (0.0-0.01), Total Impurity (0.0-0.6), Zn (Remainder) **ABS Specification** Specific Gravity g/cm2 (1.06-1.10), Melt Mass Flow Rate g/10 min. (20-26), Rockwell Hardness (95-115), DTUL @ 66 psi /0.45 MPa 0C (78-102)
Specification	• Cartridges made of high performance thermostatic polymer materials that meet the global standards for high and low pressure • High technology thermoplastic polymer minimises lime-scale build up • Standard temperature range: 15° C to 60° C (59-104°F) • Shower mixer contains ceramic cartridge for ON & OFF function. • Protected against backflow
Accessories incl.	Exposed Shower Pipe, Overhead Shower, Hand Shower & Shower Hose
Water Tightness	16 bar (Pass)
Pressure Resistance	25 bar (Pass)
Finish	Plating: Nickel-10.0 micron Chromium-0.3 micron Salt Spray (500 hrs + Validated) Adhesion (Pass)
Available Colour Finishing	CHROME (CHR)
* As per in-house testing done on automatic life cycle testing machine made by Giussain, Italy	
DISCLAIMER: Our every effort has been made to ensure factual accuracy, the information presented subject to changes due to requirements in different sites, markets and/ or countries. 10% variation in flow rate may be possible. Jaquar reserves the right to make the necessary amendments at any time without prior notice.	